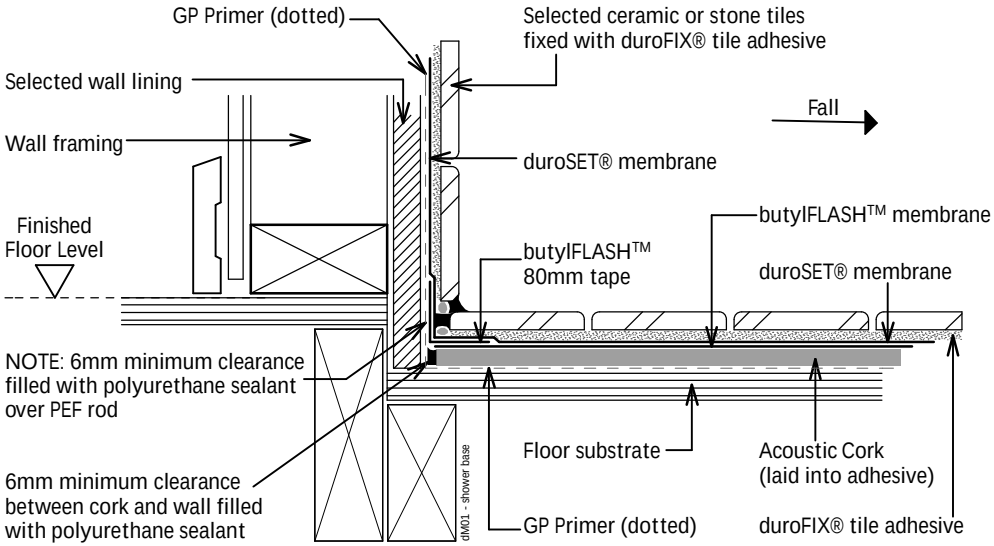

duroMAT™ INTERIOR TILE/ SHOWER DETAIL